JBL EON15-G2

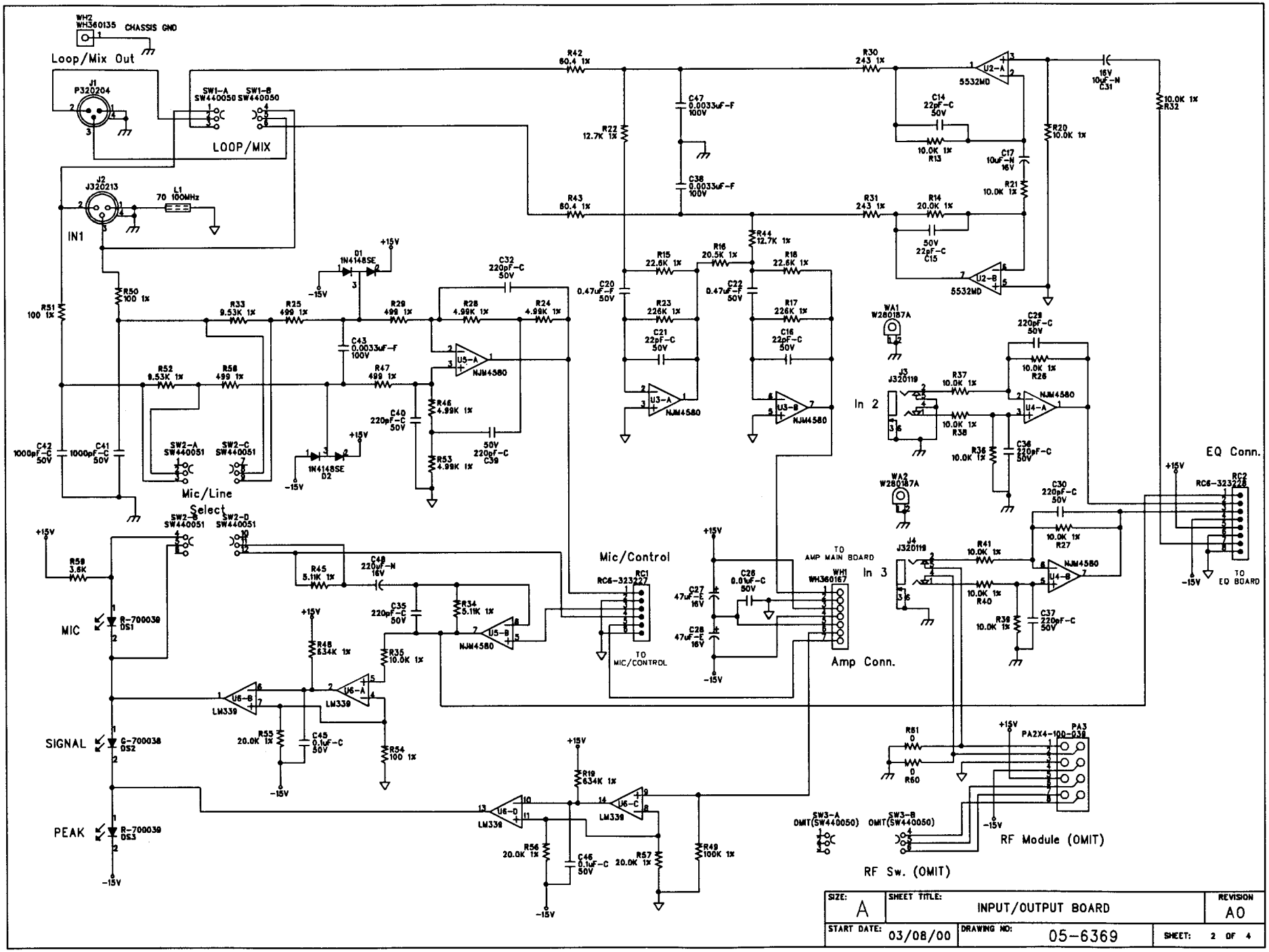
WH2
WH360135
CHASSIS GND
Loop/Mix Out
J1
P320204
SW1-A
SW440050
SW1-B
SW440050
LOOP/MIX
J2
J320213
L1
70 100MHz
IN1
R42
60.4 1%
R43
60.4 1%
R22
12.7K 1%
C47
0.0033uF-F
100V
C38
0.0033uF-F
100V
R30
243 1%
R31
243 1%
U2-A
5532MD
U2-B
5532MD
C14
22pF-C
50V
R13
10.0K 1%
C15
22pF-C
50V
R14
20.0K 1%
C17
10uF-N
16V
R21
10.0K 1%
R20
10.0K 1%
C31
10uF-N
16V
R32
10.0K 1%
R44
12.7K 1%
R15
22.6K 1%
R16
20.5K 1%
R18
22.6K 1%
C20
0.47uF-F
50V
C22
0.47uF-F
50V
R23
226K 1%
R17
226K 1%
C21
22pF-C
50V
C16
22pF-C
50V
U3-A
NJM4580
U3-B
NJM4580
D1
1N4148SE
D2
1N4148SE
+15V
-15V
C32
220pF-C
50V
R28
4.99K 1%
R24
4.99K 1%
U5-A
NJM4580
R46
4.99K 1%
C40
220pF-C
50V
R53
4.99K 1%
C39
220pF-C
50V
R50
100 1%
R51
100 1%
R33
9.53K 1%
R25
499 1%
R29
499 1%
C43
0.0033uF-F
100V
R52
9.53K 1%
R56
499 1%
R47
499 1%
C42
1000pF-C
50V
C41
1000pF-C
50V
SW2-A
SW440051
SW2-C
SW440051
Mic/Line
Select
SW2-B
SW440051
SW2-D
SW440051
R59
3.6K
MIC
R-700039
DS1
SIGNAL
G-700038
DS2
PEAK
R-700039
DS3
R45
5.11K 1%
C49
220uF-N
16V
C35
220pF-C
50V
R34
5.11K 1%
U5-B
NJM4580
R48
634K 1%
R35
10.0K 1%
U6-A
LM339
U6-B
LM339
R53
20.0K 1%
C45
0.1uF-C
50V
R54
100 1%
U6-D
LM339
R19
634K 1%
U6-C
LM339
R56
20.0K 1%
C46
0.1uF-C
50V
R57
20.0K 1%
R49
100K 1%
Mic/Control
RC6-323227
RC1
TO
MIC/CONTROL
C27
47uF-E
16V
C28
47uF-E
16V
C26
0.01uF-C
50V
TO
AMP MAIN BOARD
WH1
WH360167
Amp Conn.
WA1
W280187A
WA2
W280187A
J3
J320119
In 2
J4
J320119
In 3
R37
10.0K 1%
R38
10.0K 1%
R36
10.0K 1%
C29
220pF-C
50V
R26
10.0K 1%
U4-A
NJM4580
C36
220pF-C
50V
C30
220pF-C
50V
R27
10.0K 1%
U4-B
NJM4580
R41
10.0K 1%
R40
10.0K 1%
R39
10.0K 1%
C37
220pF-C
50V
EQ Conn.
RC2
RC6-323228
TO
EQ BOARD
R51
0
R60
0
PA3
PA2X4-100-038
SW3-A
OMIT(SW440050)
SW3-B
OMIT(SW440050)
RF Module (OMIT)
RF Sw. (OMIT)
SIZE:
A
SHEET TITLE:
INPUT/OUTPUT BOARD
REVISION
A0
START DATE:
03/08/00
DRAWING NO:
05-6369
SHEET:
2 OF 4